PEORIA, ARIZONA

THE NANOTRON 24 - INSTALLATION INSTRUCTIONS

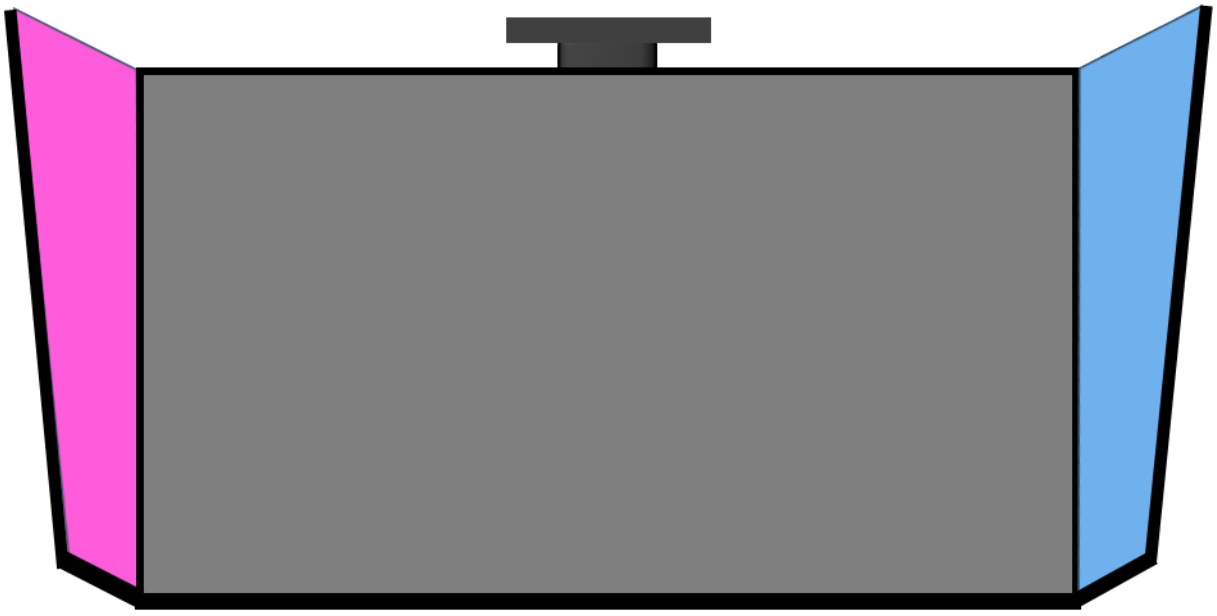

AFFIX YOUR BASE GRAPHIC BEFORE BEGINNING INSTALLATION
PLEASE REFER TO THE GRAPHICS INSTALLATION INSTRUCTIONS

© The Mini Jumbotron Company, LLC

AFFIX YOUR BASE GRAPHIC BEFORE BEGINNING INSTALLATION
PLEASE REFER TO THE GRAPHICS INSTALLATION INSTRUCTIONS

PLEASE TAKE YOUR TIME WITH THE INSTALLATION PROCESS. PLEASE ASK SOMEONE TO HELP WITH ANY STEP THAT INVOVLES HEAVY LIFTING.

DURING INSTALLATION, PLEASE PROTECT THE MINI JUMBOTRON BASE SO IT DOES NOT SCRATCH.

Before enjoying your Mini Jumbotron, you will need to assemble its guts. No guts, no glory.

STEP 1: Locate the ceiling mount and ceiling mount hardware. Before attaching the ceiling mount to a joist or other location that is capable of holding the weight of your Mini Jumbotron model (about 75 lbs. for this model), be sure the nut inside the ceiling mount is tight and that the shaft of the ceiling mount does not spin independently.

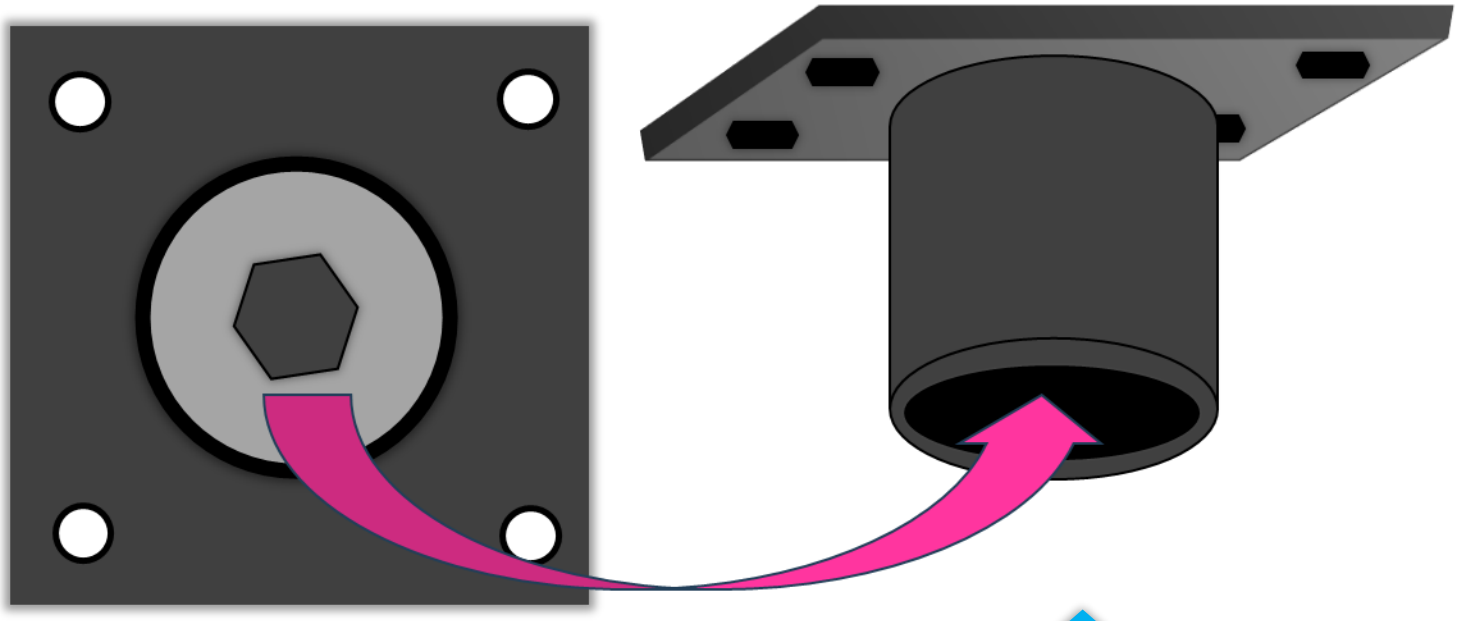



STEP 2: Thread the pole into the ceiling mount but do not overtighten the pole as you may wish to twist the pole later in order to change the direction of the base. Notice the direction of the hole at the bottom of the pole as this hole is used to attach the base to the pole.

The threads on the pole are tapered and will likely only thread halfway Into the ceiling mount. This is normal and by design.

© The Mini Jumbotron Company, LLC

STEP 3: QUAD TV MOUNT

ATTACH QUAD POST FLANGE: Locate and install the Quad Post Flange about halfway up the pole with the small lip at the ends facing up. Use Allen key to gently tighten the set screw to hold the quad post flange in place.

ATTACH THE BASE: Use the silver pin to attach the base to the pole. Make any final twist adjustments to the pole to be sure the bottom of the base is facing the desired direction.

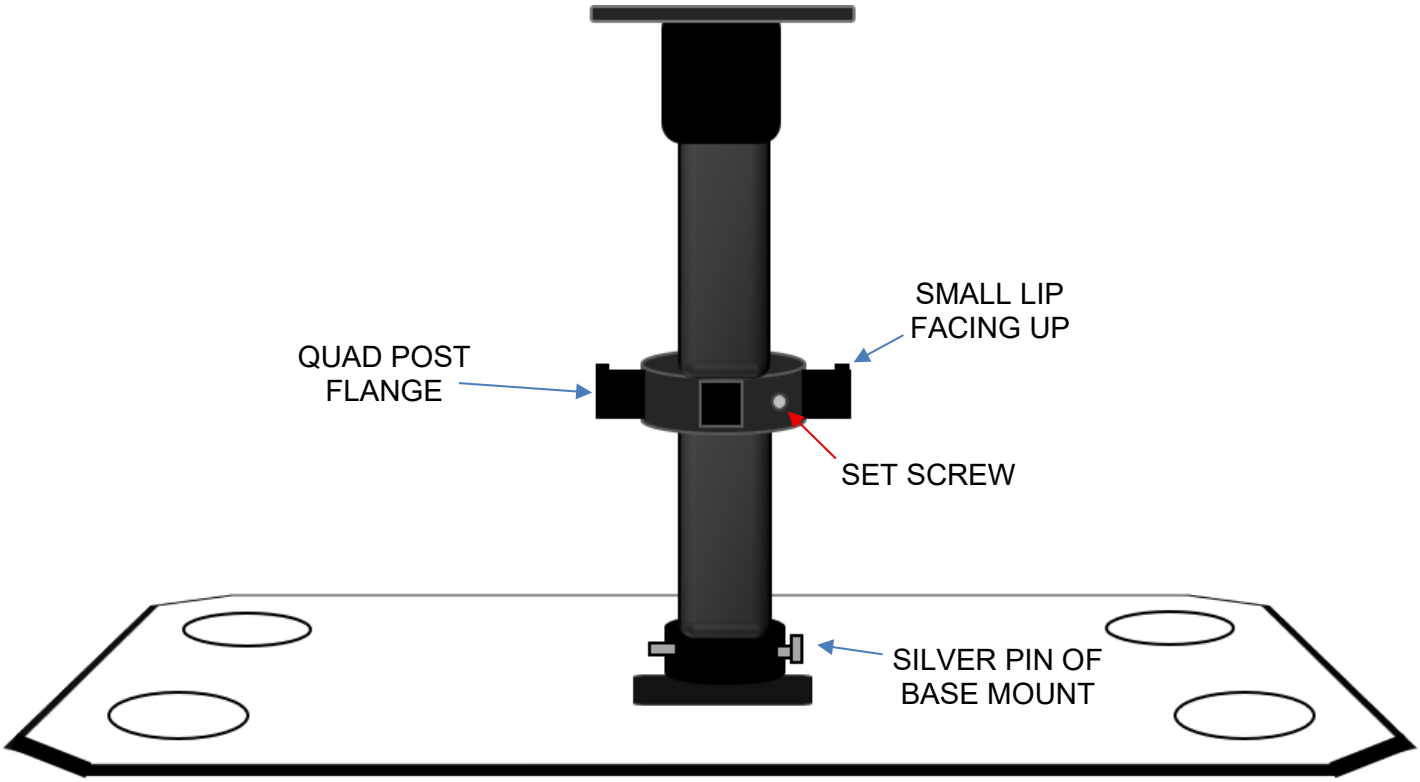

© The Mini Jumbotron Company, LLC

STEP 4: QUAD TV MOUNT ARMS



LIFT UP THE SNAPLOCK TO PUSH THE TV MOUNT ARM ONTO THE QUAD POST FLANGE.



CLOSE THE SNAPLOCK TO LOCK THE TV MOUNT ARM ONTO THE QUAD POST FLANGE.



LIFT UP THE SNAPLOCK TO ADJUST THE LENGTH OF THE TV MOUNT ARM.



CLOSE THE SNAPLOCK TO LOCK THE TV MOUNT ARM LENGTH.

© The Mini Jumbotron Company, LLC

STEP 5: TV VESA PLATES

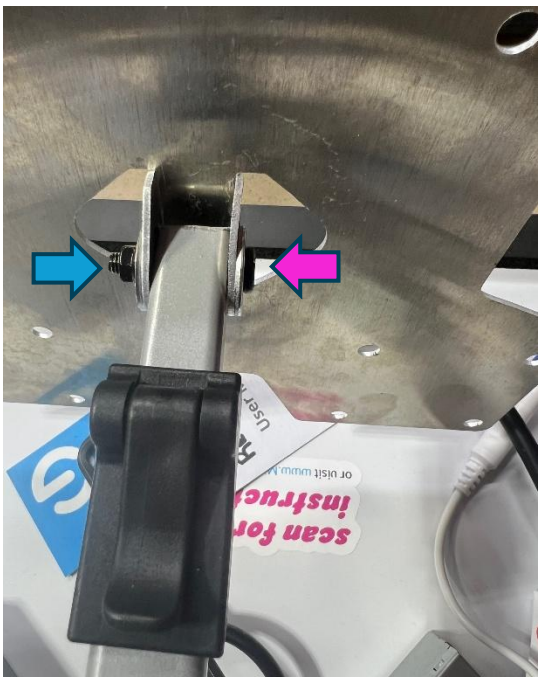

USE AN 8MM WRENCH AND PHILLIPS SCREW DRIVER TO ATTACH THE VESA PLATES TO THE END OF THE TV MOUNT ARMS.

IMPORTANT FOR TV INSTALLATION:

THE TV MOUNT ARMS ARE NOT DESIGNED TO SUPPORT THE FULL WEIGHT OF THE TVS.

DO NOT ATTACH THE TVS TO THE VESA PLATE UNLESS THE TVS ARE RESTING AND WILL REMAIN RESTING ON THE SEAL THE BASE.

USE THE SET SCREW IN THE QUAD POST FLANGE TO ADJUST THE HEIGHT OF THE TV MOUNT ARMS SO THAT TVS REMAIN IN CONTACT WITH THE BASE AT ALL TIMES. IF YOU NOTICE THE MOUNT ARMS BENDING OR FLEXING THEN YOUR MOUNT ARMS MUST BE ADJUSTED USING THE SET SCREW.

PLEASE DO NOT BREAK THE MOUNT ARMS AS IT MAY TAKE 2 WEEKS TO SEND A REPLACEMENT.

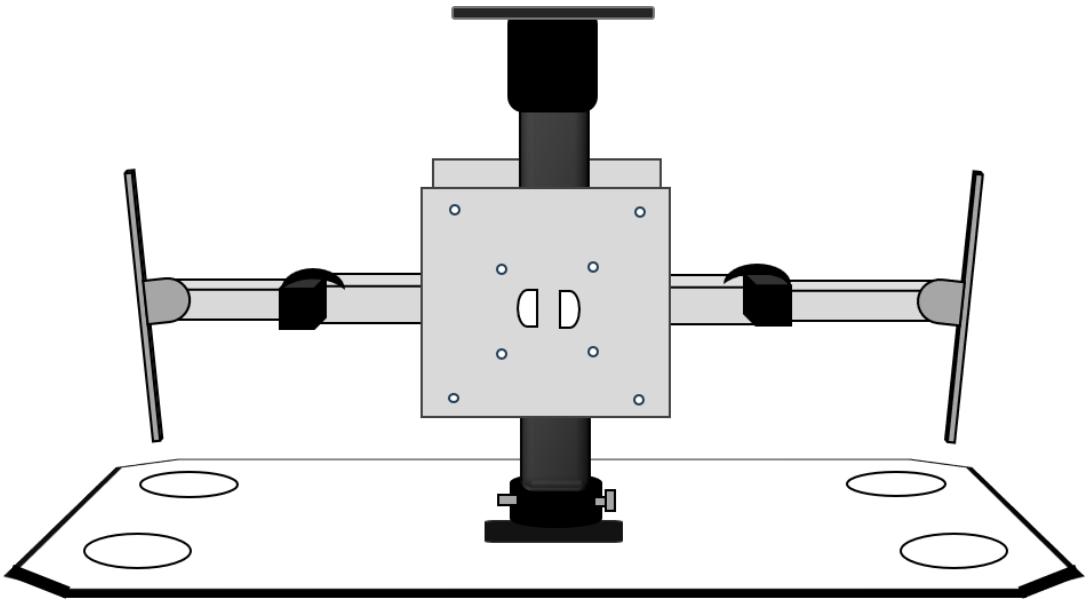

Helpful Tips:

- Each TV should be centered on their side of the base and should rest evenly on the foam strip with the TV remote sensor visible. **If your chosen TVs have a large sensor be sure to cut a notch in the foam on the base, using a razor blade, so your TVs will sit flush on the foam seal. Do not cut the TV sensor notch any larger or deeper than necessary or light will be visible. Please take your time and call if you have questions.**
- The top of each TV should be angled 10-15 degrees towards the floor. You will know if your TVs are positioned correctly once you add the plexiglass sides.

© The Mini Jumbotron Company, LLC

STEP 6: Affix the LED Pod Lights to the center pole to shine towards the corner of the jumbotron. They are intended to illuminate the back of the corner plexiglass. Plug in all your lighting. Try to keep the cords as short and tidy as possible. Download the GOVEE HOME app to configure and control your recessed lights and any other Govee Brand Lighting. Please refer to the lighting manuals for more information regarding configuring and controlling your lights.

Govee Home App

GET IT ON Google Play

Download on the App Store

STEP 7: PLEASE TAKE YOUR TIME WITH THIS NEXT STEP. The 4 plexiglass corner pieces fit into the black slots on the corners of the base and will be held in place with the provided seal and Velcro that you will add to left and right sides of each TV. The seal and Velcro will eliminate gaps between the TVs and the plexiglass. Test fit the plexiglass. See picture for ideal placement of both.

- When applying the seal and velcro, keep it relatively flat with the front of the TV so that it doesn't stick out in front of the TV". Take your time. If you mess up and need to order more seal you can do so here.
- Apply pressure to the seal on the side of the TVs and give the adhesive 15 minutes to adhere before applying the Velcro. Then apply the Velcro and give the Velcro time to adhere as well.





CLICK HERE TO WATCH VIDEO

STEP 9: Attach the corner plexiglass pieces and adjust the TVs as necessary to get everything looking great. When you feel all four corners are in the right place you may securely tighten the TV mount angles.

© The Mini Jumbotron Company, LLC

When you've got it looking good and something cool displaying on the TVs, please text a brief video and pics to 623-606-6176. Congratulations and thank you!

PS: If you have tips on how we can improve the product or installation process please let me know. Thank you!

ENJOY YOUR MINI JUMBOTRON!

GOT QUESTIONS? PLEASE CALL OR TEXT 623-606-6176

Please also send us pictures and a video to post of your Mini Jumbotron

© The Mini Jumbotron Company, LLC