The Mini Jumbotron Co.

PEORIA, ARIZONA

MINITRON INSTALLATION INSTRUCTIONS

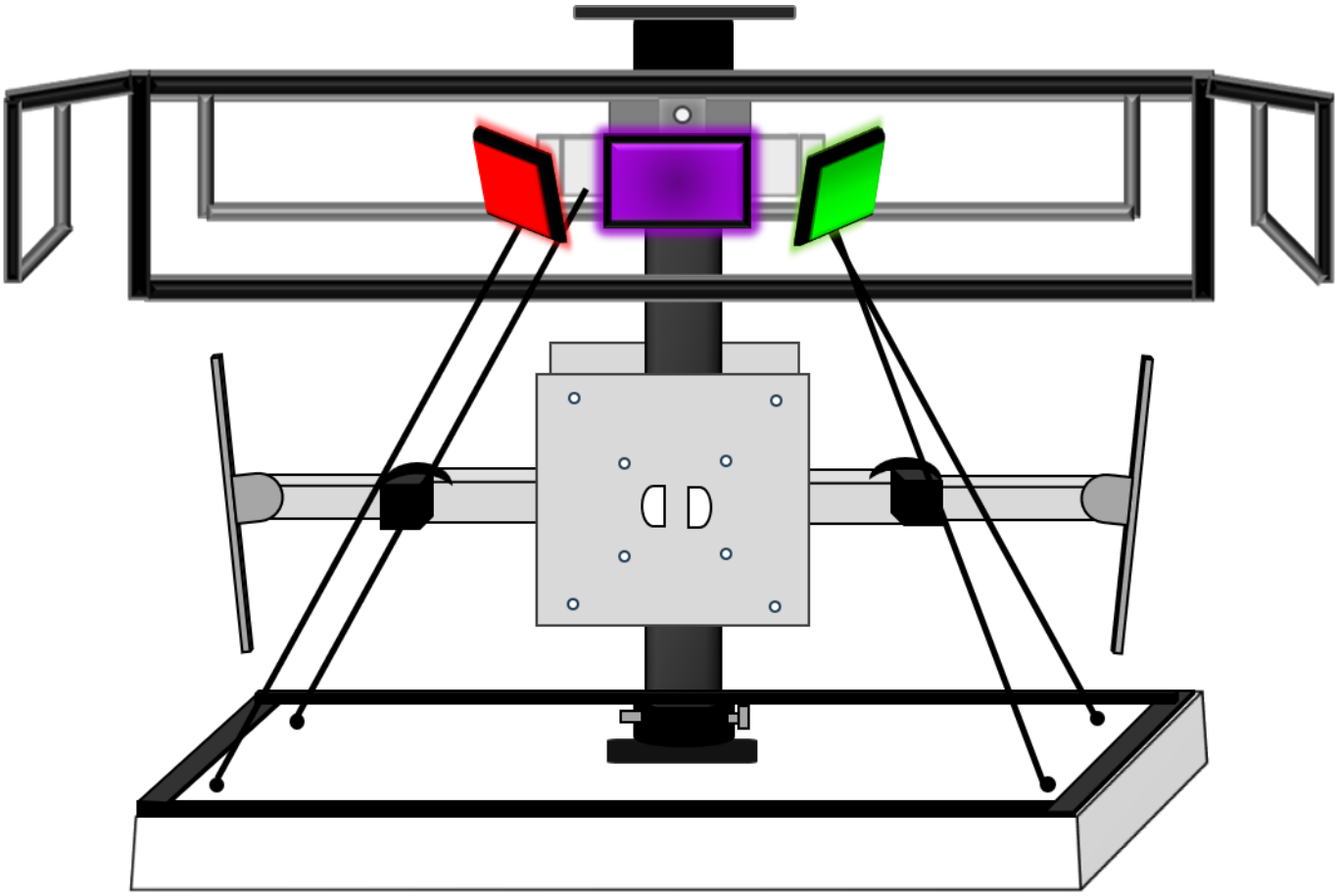

© The Mini Jumbotron Company, LLC

PLAY-BY-PLAY

PLEASE TAKE YOUR TIME WITH THE INSTALLATION AND ASK SOMEONE TO HELP WITH ANY HEAVY LIFTING REQUIRED IN THESE INSTRUCTIONS.

WE TALKIN' ABOUT PRACTICE: WE RECOMMEND PERFORMING A PRACTICE INSTALL ON A TABLE BEFORE ATTEMPTING TO MOUNT THE MINI JUMBOTRON TO THE CEILING. THIS PRACTICE INSTALL WILL RESULT IN A SMOOTHER CEILING INSTALL AS IT OFFERS AN OPPORTUNITY TO DIAL IN THE MOUNTS, ATTACH THE SEAL & VELCRO TO THE TVS, MOUNT LIGHTING, AND TIDY UP CORDS. IT IS MUCH EASIER TO MAKE THESE TWEAKS NOW BEFORE THE MINITRON IS CEILING MOUNTED.

DURING ALL STEPS, PLEASE PROTECT THE MINI JUMBOTRON SO IT DOES NOT SCRATCH.

Before enjoying your MINITRON, you will need to assemble its guts. No guts, no glory.

Here is the play-by-play:

STEP 1: Locate the ceiling mount and ceiling mount hardware. Before attaching the ceiling mount to a joist or other location that is capable of holding the weight of your Mini Jumbotron model (about 95 lbs. for this model), be sure the nut inside the ceiling mount is tight and that the shaft of the ceiling mount does not spin independently.

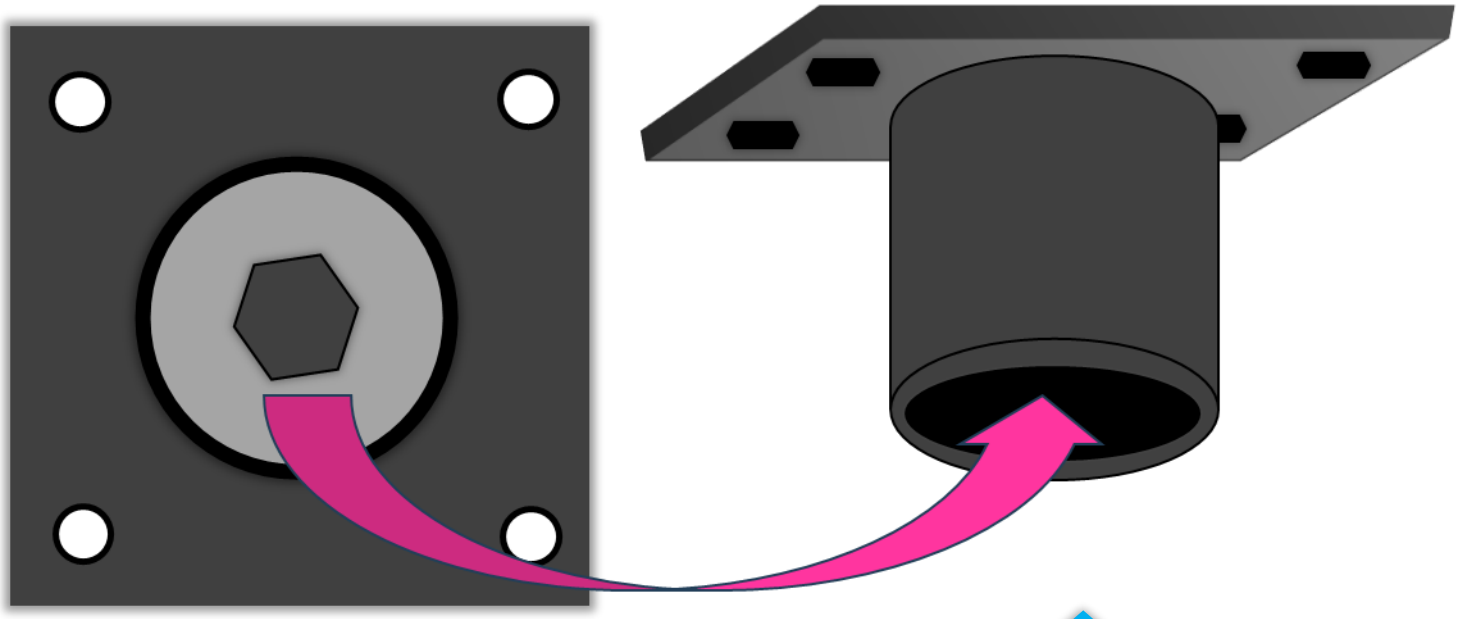



STEP 2: Screw the threaded side of the pole into the ceiling mount. After screwing the pole into the ceiling mount, pull on the pole to double check that it is secure attached and is able to hold about 80 lbs.

© The Mini Jumbotron Company, LLC

STEP 3: Locate the aluminum frame and install the ceiling accent lights (Govee string lights) on top of the frame. Install the lights about 1.5” back from the front edge of the frame so that the string of lights is not visible when the Mini Jumbotron is ceiling mounted. The extra length of the light string may be wrapped around again or across the middle of the top of the frame. Download the Govee Home App to configure the color lighting.

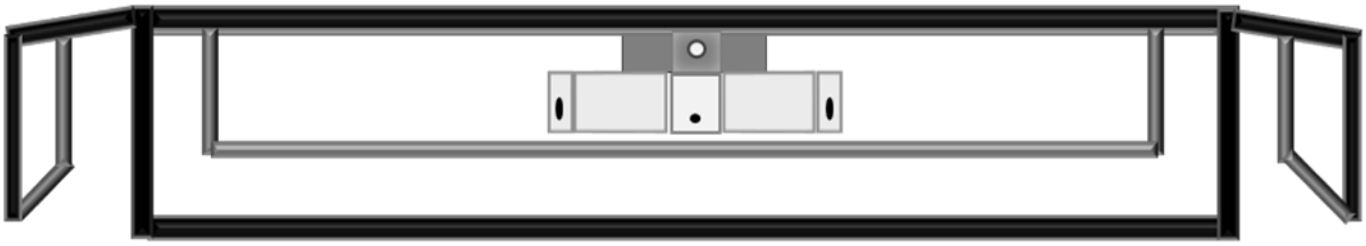

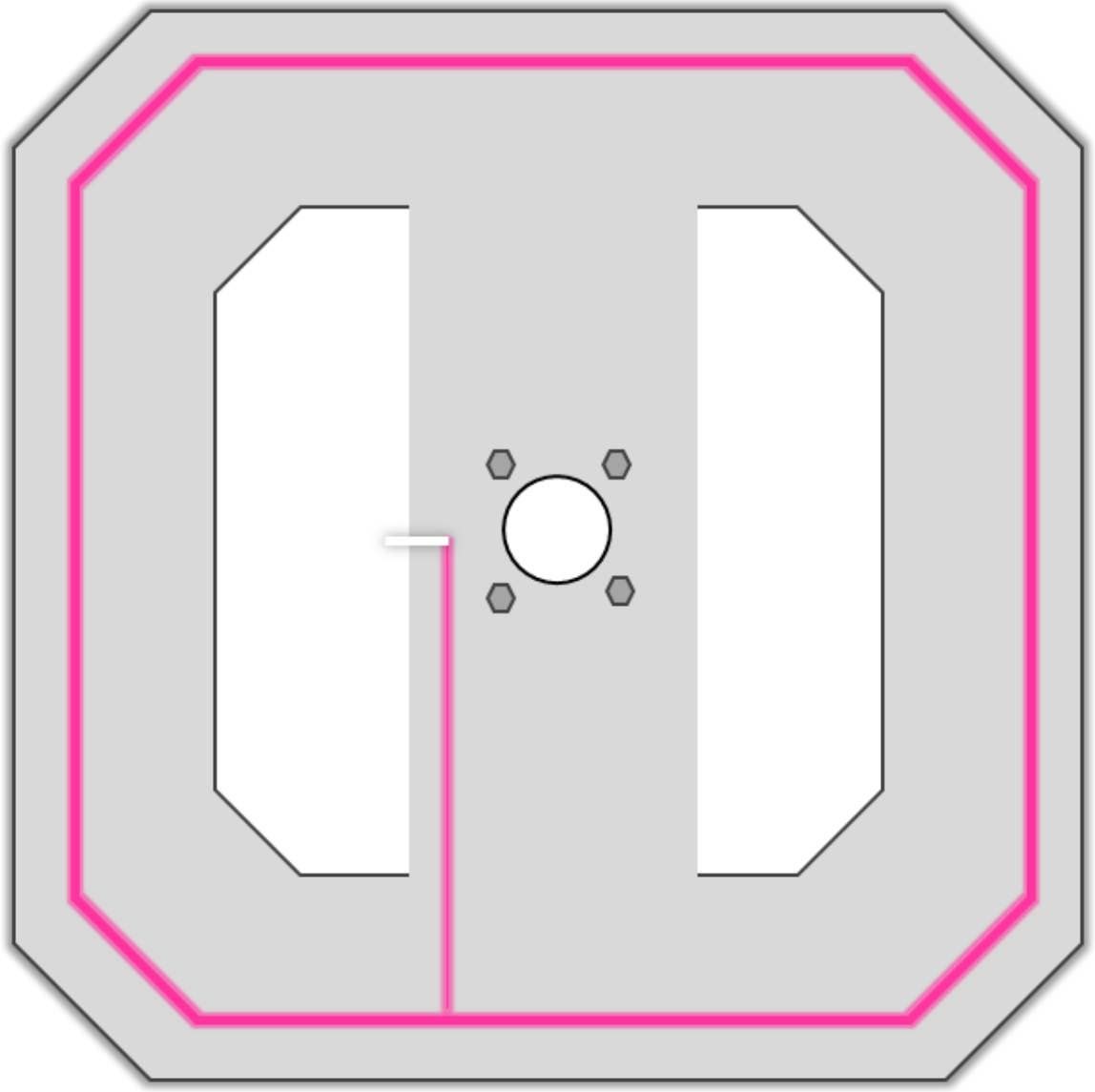

© The Mini Jumbotron Company, LLC

STEP 4: Lift and push up the frame onto the pole as high as you can and then tighten the set screw using the hex key to keep the frame up and out of the way. This will help keep the frame out of the way while you install the TVs in a later step.

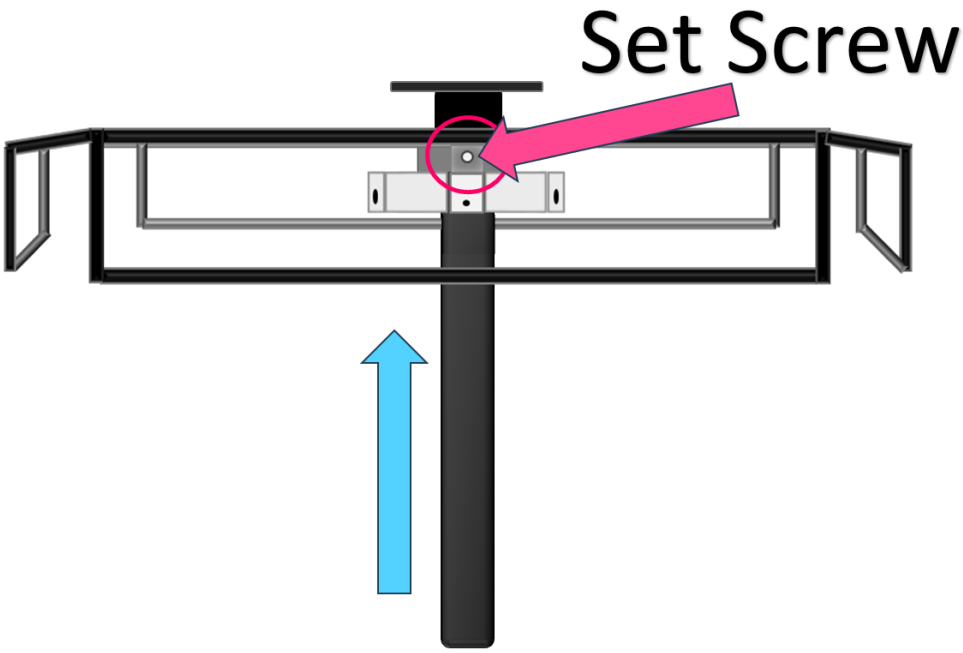

STEP 5: QUAD TV MOUNT

ATTACH QUAD POST FLANGE: Locate and install the Quad Post Flange about 1/3 up the pole with the small lip at the ends facing up. Use Allen key to gently tighten the set screw to hold the quad post flange in place.

ATTACH THE BASE: Use the silver pin to attach the base to the pole. Make any final twist adjustments to the pole to be sure the bottom of the base is facing the desired direction.

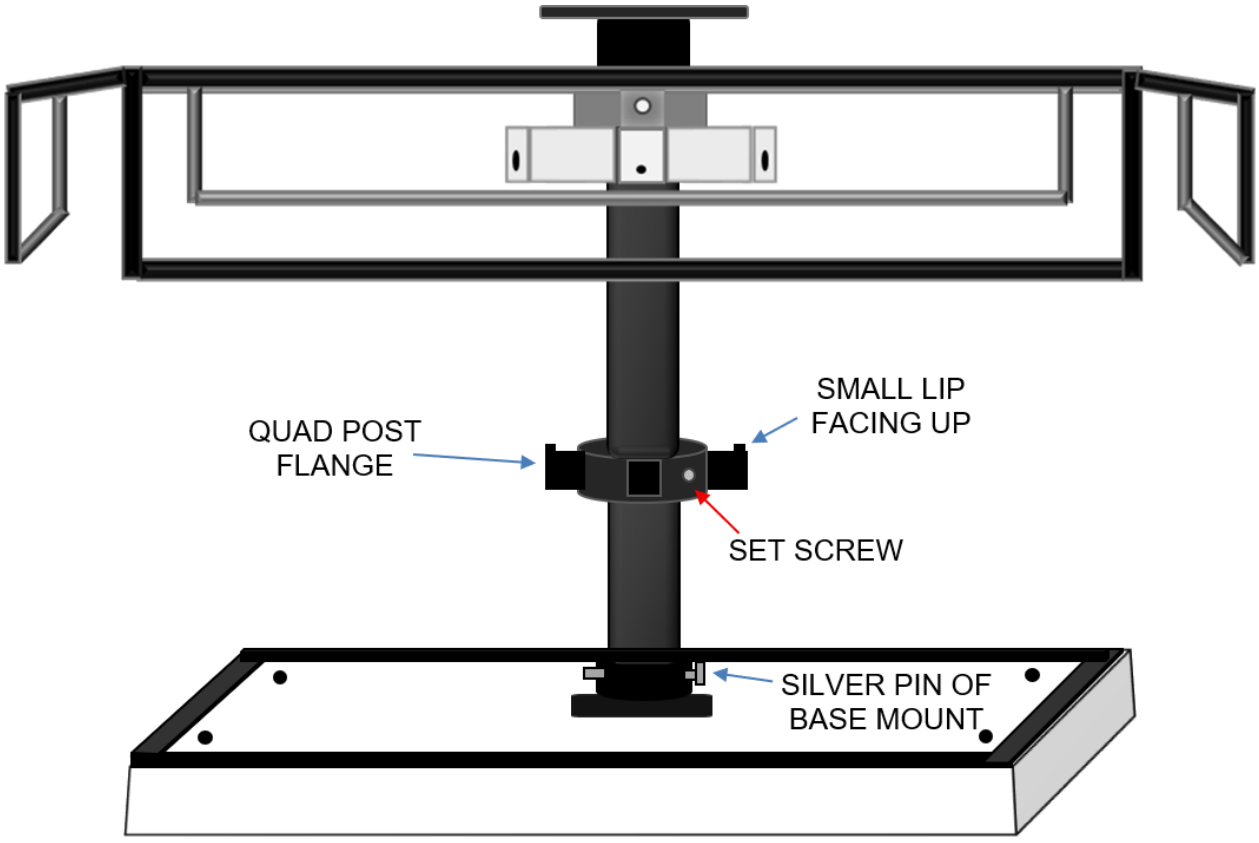

© The Mini Jumbotron Company, LLC

STEP 6: QUAD TV MOUNT ARMS



LIFT UP THE SNAPLOCK TO PUSH THE TV MOUNT ARM ONTO THE QUAD POST FLANGE.



CLOSE THE SNAPLOCK TO LOCK THE TV MOUNT ARM ONTO THE QUAD POST FLANGE.



LIFT UP THE SNAPLOCK TO ADJUST THE LENGTH OF THE TV MOUNT ARM.



CLOSE THE SNAPLOCK TO LOCK THE TV MOUNT ARM LENGTH.

© The Mini Jumbotron Company, LLC

STEP 7: TV VESA PLATES

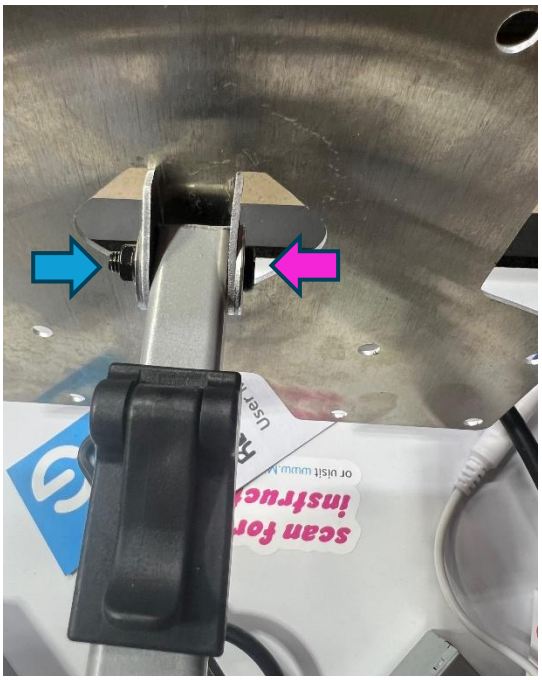

USE AN 8MM WRENCH AND PHILLIPS SCREW DRIVER TO ATTACH THE VESA PLATES TO THE END OF THE TV MOUNT ARMS.

IMPORTANT FOR TV INSTALLATION:

THE TV MOUNT ARMS ARE NOT DESIGNED TO SUPPORT THE FULL WEIGHT OF THE TVS.

DO NOT ATTACH THE TVS TO THE VESA PLATE UNLESS THE TVS ARE RESTING AND WILL REMAIN RESTING ON THE SEAL THE BASE.

USE THE SET SCREW IN THE QUAD POST FLANGE TO ADJUST THE HEIGHT OF THE TV MOUNT ARMS SO THAT TVS REMAIN IN CONTACT WITH THE BASE AT ALL TIMES. IF YOU NOTICE THE MOUNT ARMS BENDING OR FLEXING THEN YOUR MOUNT ARMS MUST BE ADJUSTED USING THE SET SCREW.

PLEASE DO NOT BREAK THE MOUNT ARMS AS IT MAY TAKE 2 WEEKS TO SEND A REPLACEMENT.

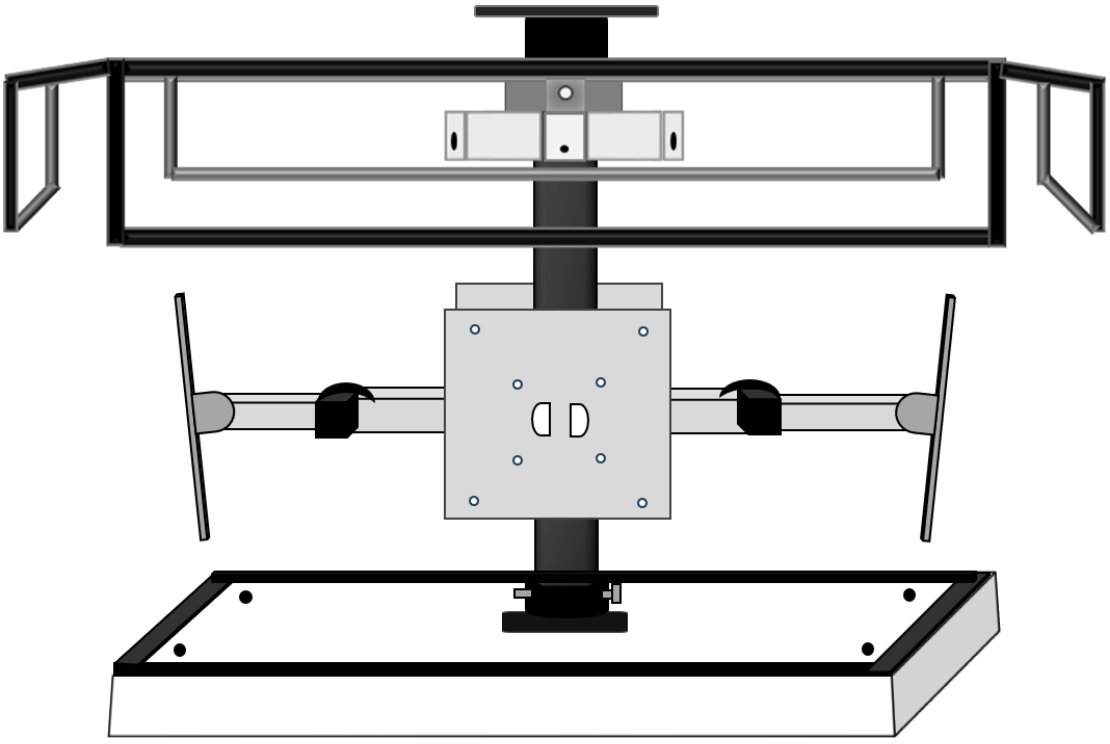

Helpful Tips:

- Each TV should be centered on their side of the base and should rest evenly on the foam strip with the TV remote sensor visible. **If your chosen TVs have a large sensor be sure to cut a notch in the foam on the base, using a razor blade, so your TVs will sit flush on the foam seal. Do not cut the TV sensor notch any larger or deeper than necessary or light will be visible. Please take your time and call if you have questions.**
- The top of each TV should be angled 10-15 degrees towards the floor. You will know if your TVs are positioned correctly once you add the plexiglass sides.

© The Mini Jumbotron Company, LLC

STEP 8: Now it is time to lower the top aluminum frame by loosening the set screw. The seal on the bottom of the frame should rest evenly and level on top of all four TVs. Be sure the front of frame is not bowed out. The front of all 4 sides of the frame should be straight up and down. Tighten the set screw once the frame is properly positioned.

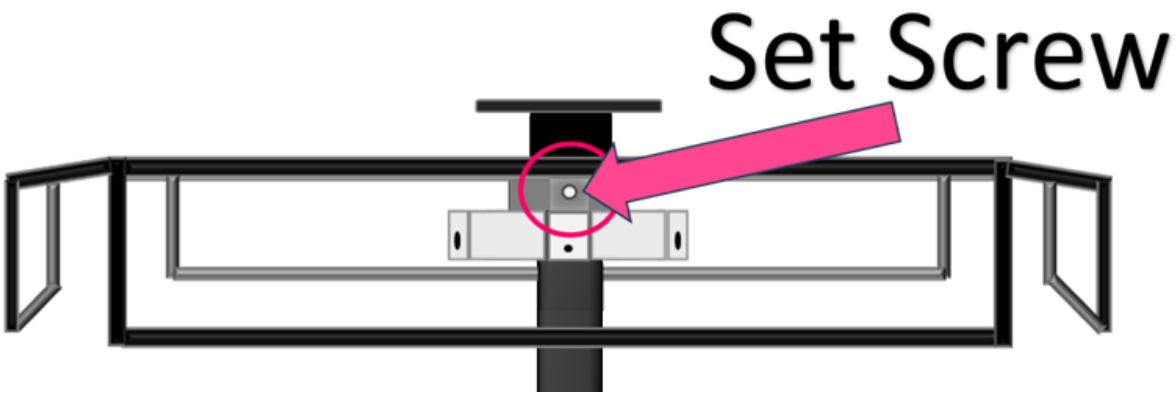

Attach your bungee cords to the corners of the light bracket and the corners of the base. Install the Govee Flood Lights to the silver light bracket using the screws and nuts. They are intended to illuminate the back of the corner plexiglass. Plug in all your lighting. Try to keep the cords as short and tidy as possible.

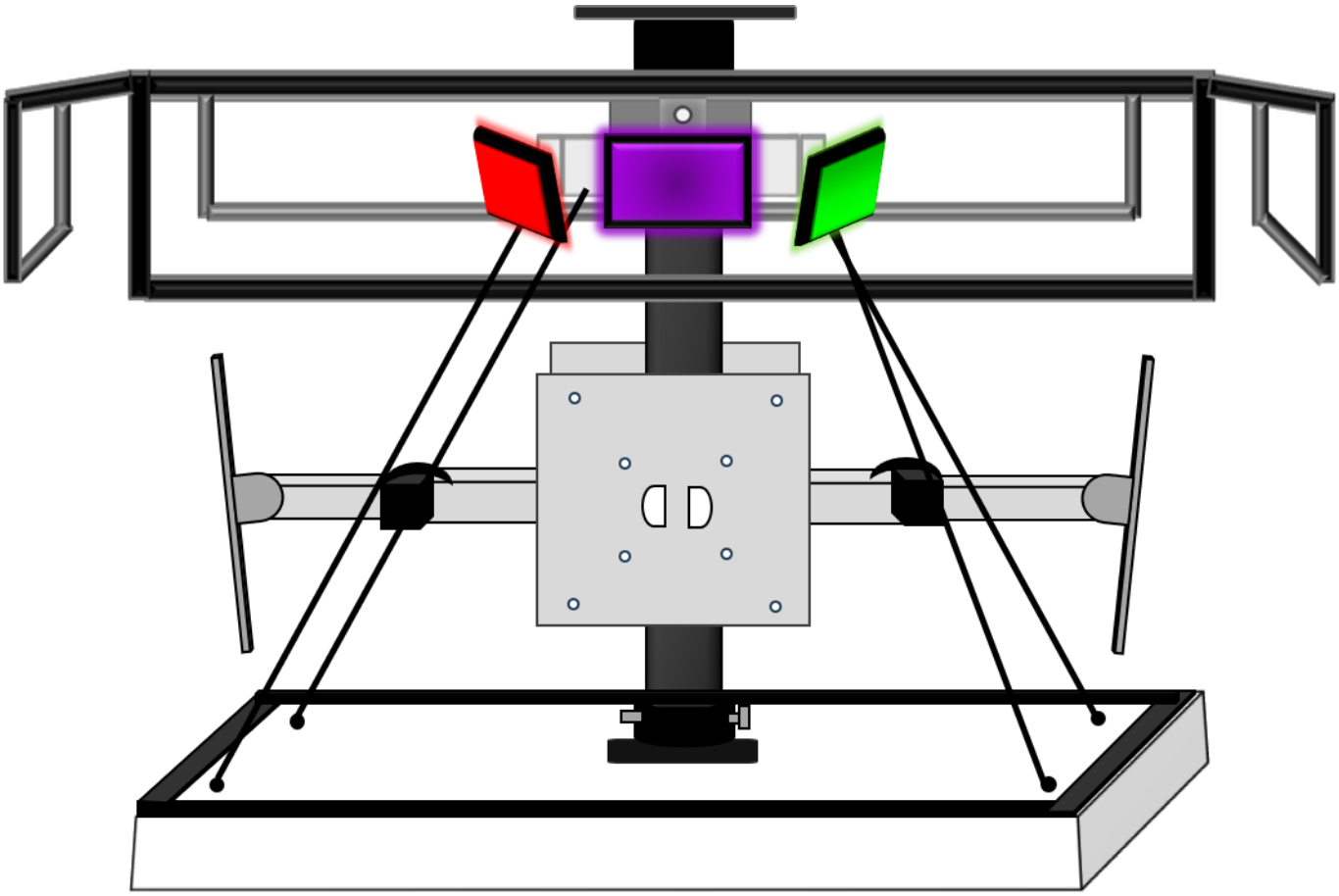

© The Mini Jumbotron Company, LLC

Download the GOVEE HOME app to configure and control all Govee Brand Lighting. Please refer to the lighting manuals for more information regarding configuring and controlling your lights.

Govee Home App

GET IT ON Google Play

Download on the App Store

STEP 9: PLEASE TAKE YOUR TIME WITH THIS NEXT STEP. The 4 plexiglass corner pieces fit into the black slots on the corners of the base and will be held in place with the provided seal and Velcro that you will add to left and right sides of each TV. The seal and Velcro will eliminate gaps between the TVs and the plexiglass. Test fit the plexiglass. See picture for ideal placement of both.

- When applying the seal and velcro, keep it relatively flat with the front of the TV so that it doesn't stick out in front of the TV". Take your time. If you mess up and need to order more seal you can do so here.
- Apply pressure to the seal on the side of the TVs and give the adhesive 15 minutes to adhere before applying the Velcro. Then apply the Velcro and give the Velcro time to adhere as well.

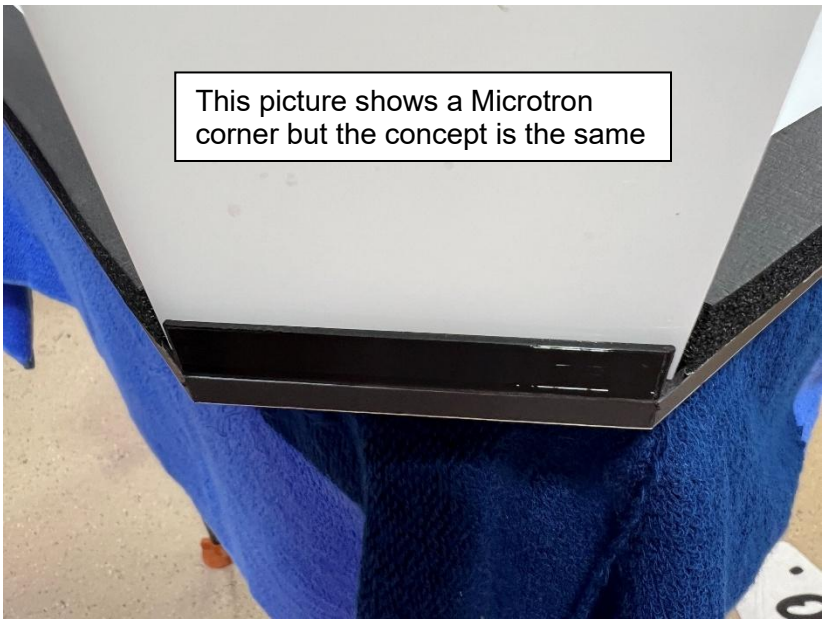



CLICK HERE TO WATCH VIDEO

© The Mini Jumbotron Company, LLC

When you've got it looking good and something cool displaying on the TVs, please text a brief video and pics to 623-606-6176. Congratulations and thank you!

PS: If you have tips on how we can improve the product or installation process, please let me know. Thank you!

ENJOY YOUR MINI JUMBOTRON!

© The Mini Jumbotron Company, LLC